Components

Pulse Pickers

- External high-frequency or optical signal triggering (the device has a built-in photodetector with fiber input)
- HV pulse with variable delay and amplitude
- USB connection and LabView-compatible software included
- Five independent delay channels
- Capability of controlling up to three Pockels cells via one control and power supply
- High contrast ratio
- Low jitter

OG pulse picker with control unit

Product overview

The pulse picker consists of the pockels cell, high voltage driver, synchronization and delay generator. It is suitable for single pulse selection from train of femtosecond or picosecond pulses. Also the device is used for pulse slicing in order to increase contrast. USB connection with LabView-compatible driver provides smooth control over device performance.

Models OG8-2, OG12-2 incorporate one Pockels cell and produce two high voltage pulses.

Customer-requested high voltage generators up to 50kV are also available.

Application:
- Single or multiple pulse selection from a femtosecond or opicoseconds pulse train
- Pulse picking for contrast improvement
- Injection/ejection of pulses into/out of regenerative amplifiers

Models and options available				
OG8-1-1	one channel	8 kV	single shot -1 kHz	
OG8-10-1	one channel	8 kV	500 Hz - 10 kHz	
OG8-25-1	one channel	8 kV	500 Hz - 25 kHz	
OG12-1-1	one channel	12 kV	single shot -1 kHz	
OG12-10-1	one channel	12 kV	500 Hz - 10 kHz	
OG8-1-2	two channels	8 kV	single shot -1 kHz	
OG12-1-2	two channels	12 kV	single shot -1 kHz	
OG55-1-1	one channel	5 kV	single shot -1 kHz	10-1000 ns (square pulse)
OG88-1-1	one channel	8 kV	1 Hz - 1 kHz	10-1000 ns (square pulse)

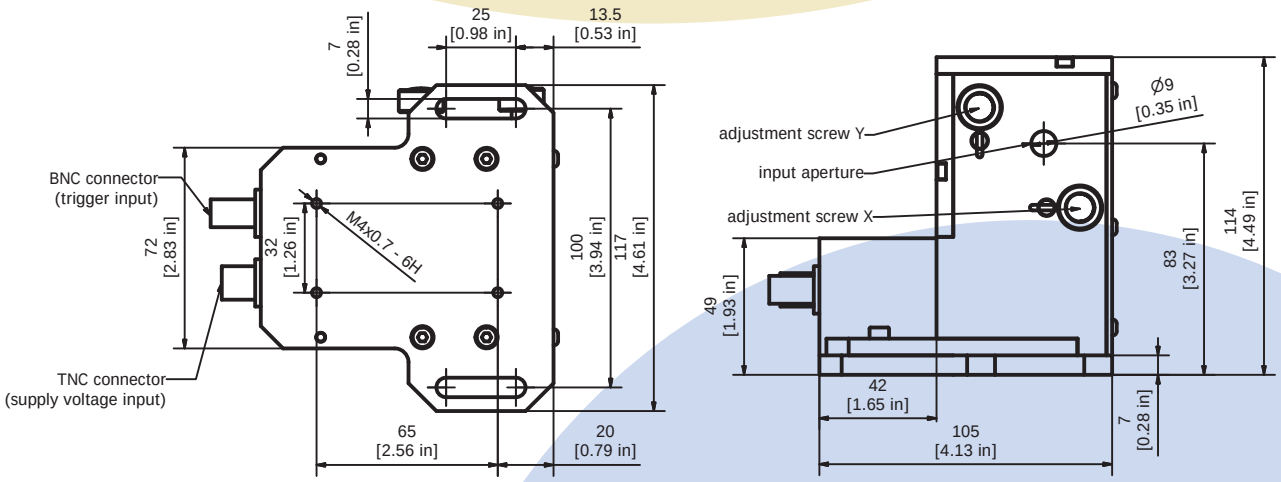

OG8-1,OG8-10, OG12-1 drawing

Avesta Project Ltd.
P. N. Lebedev Physical Institute,
KRF-2 building, Troitsk, 142190,
Moscow region, Russia

Tel: +7 495 967-94-73
+7 495 745-22-05
+7 4967 51-00-78
Fax: +7 495 646-04-95

e-mail: fs@avesta.ru
www.avesta.ru

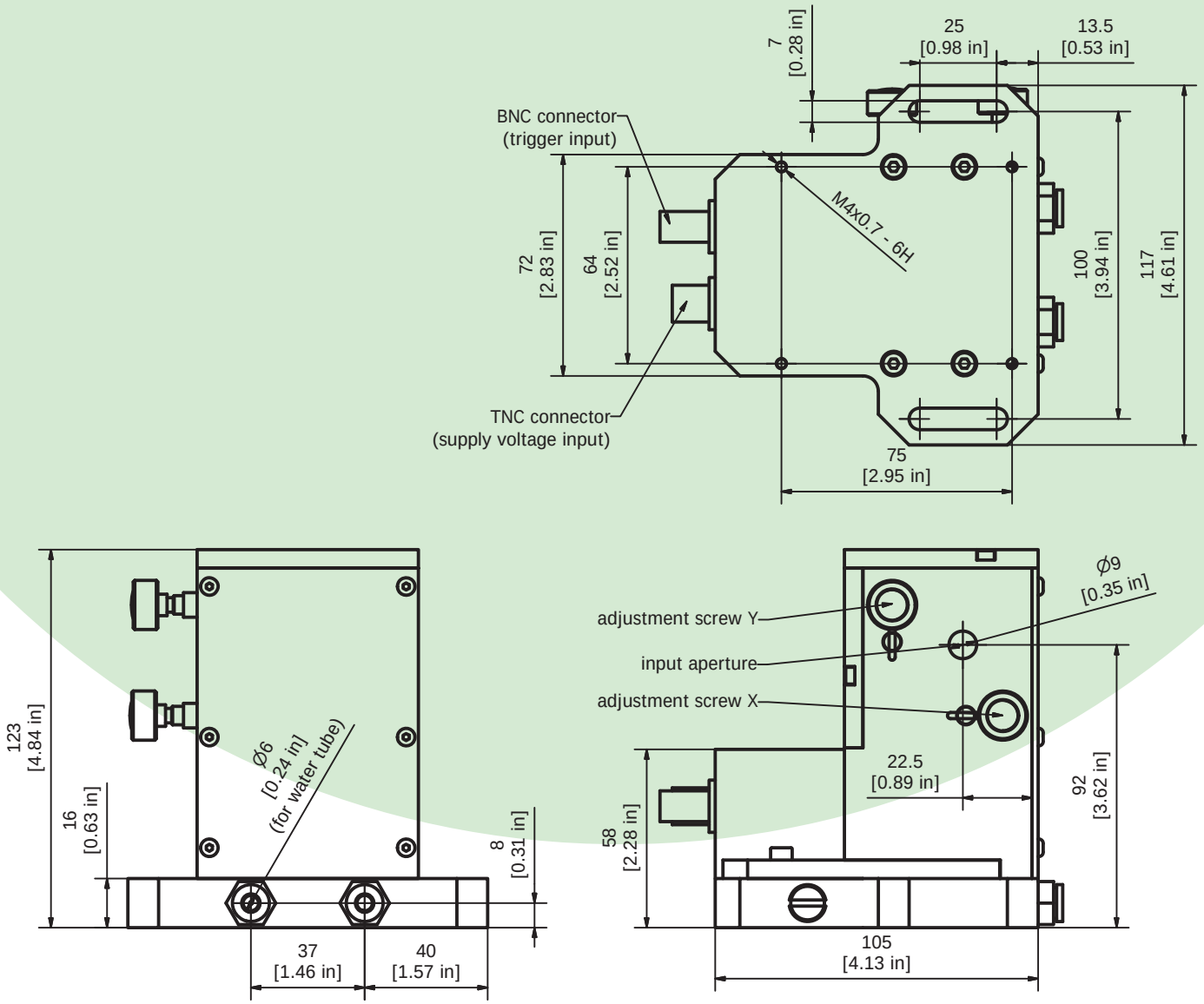

OG8-25, OG12-10 drawing

Pulse pickers technical specifications

	OG8	OG12
Output voltage, kV	4-8	6-12
Rise time (at level 0.1-0.9 of maximum), ns	< 4	
Fall time (at level 0.1-0.9 of maximum), ns	< 4	
Pulse duration (at level 0.1-0.1 of maximum), ns	< 10	
Temporal stability (jitter), ps	< 200	
Contrast ratio	> 1000:1	
Maximum output frequency, kHz	up to 1/ 5/ 10/ 25/ 50 (various models)	
Optical pulse frequency, MHz	20...150	
Delay range, ns	0-4000 (0-1 ms for all delay channels in respect to the trigger pulse)	

Avesta Project Ltd.
P. N. Lebedev Physical Institute,
KRF-2 building, Troitsk, 142190,
Moscow region, Russia

Tel: +7 495 967-94-73
+7 495 745-22-05
+7 4967 51-00-78
Fax: +7 495 646-04-95

e-mail: fs@avesta.ru
www.avesta.ru