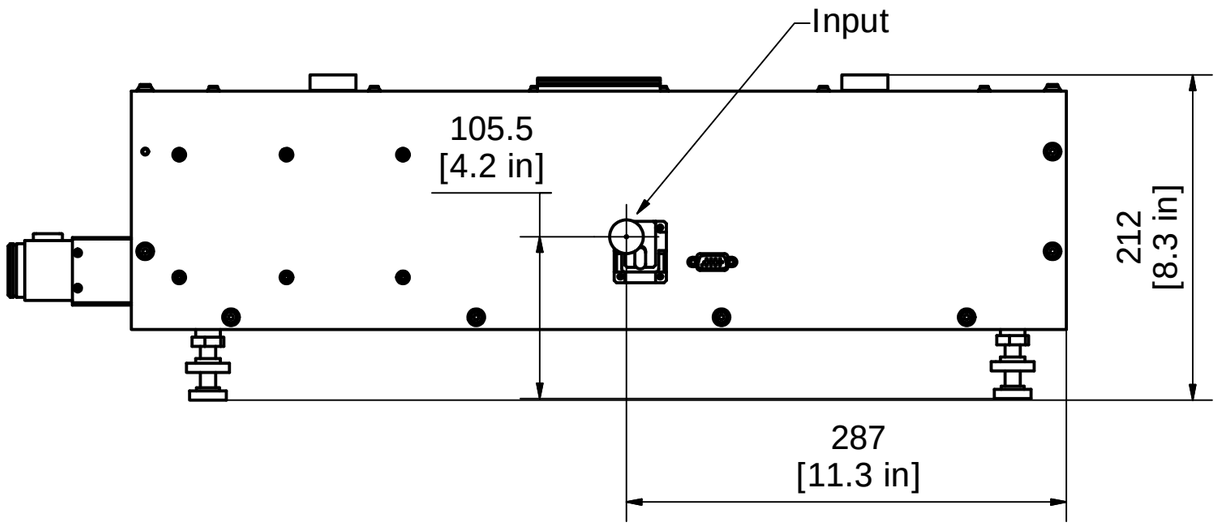

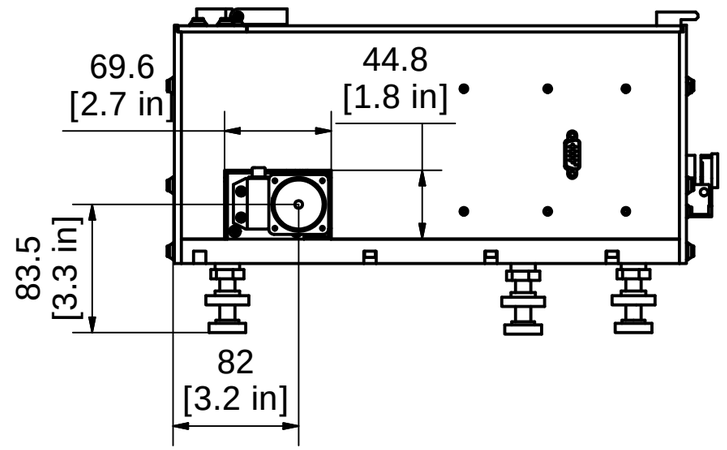

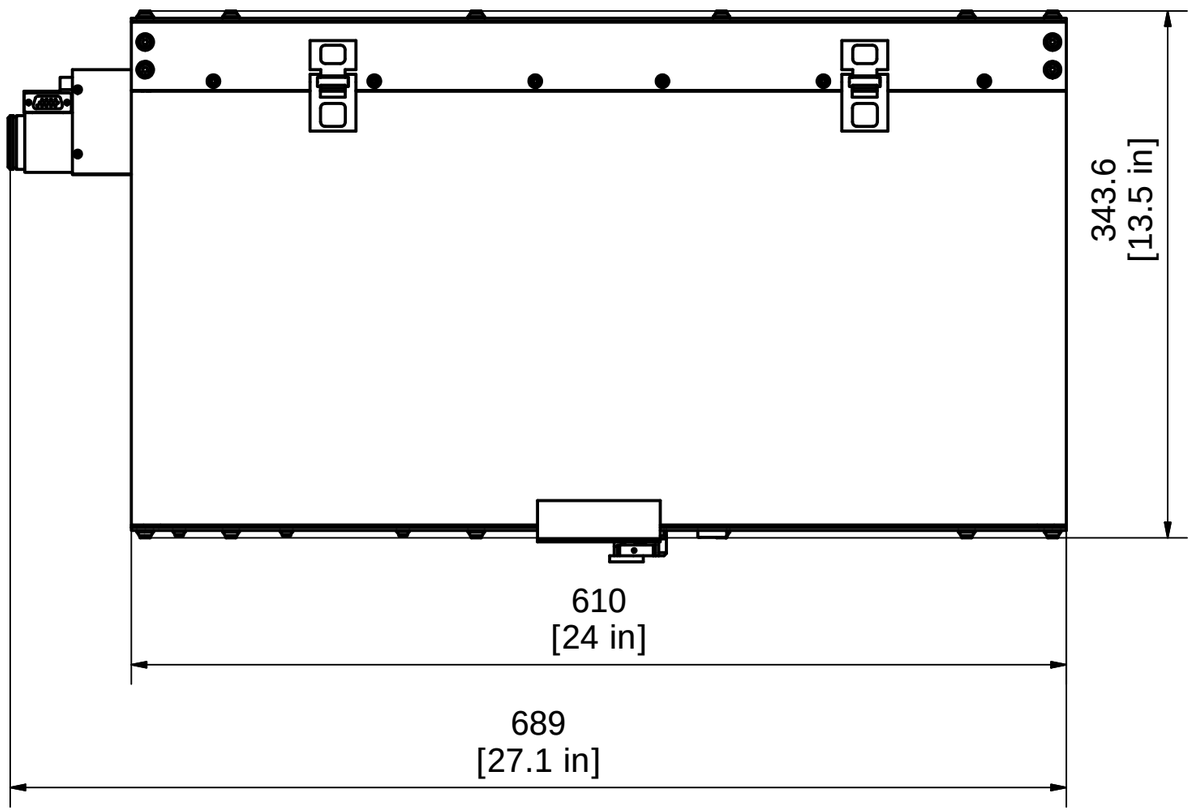

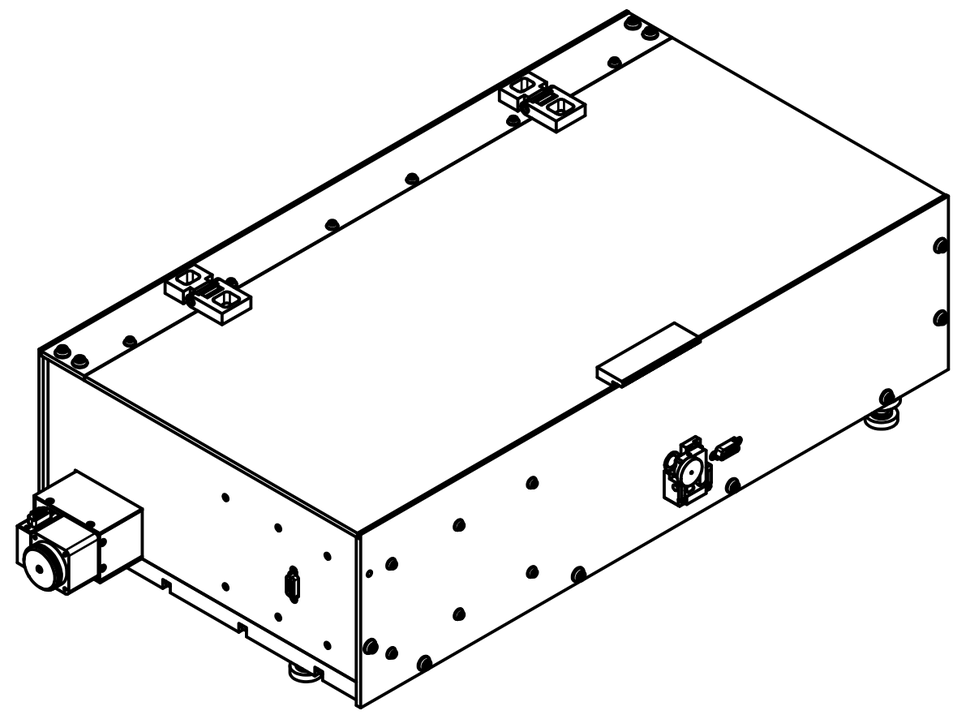

COPYRIGHT @ 2008 by Avesta Project Ltd.