COPYRIGHT © 2009 by Avesta Project Ltd.

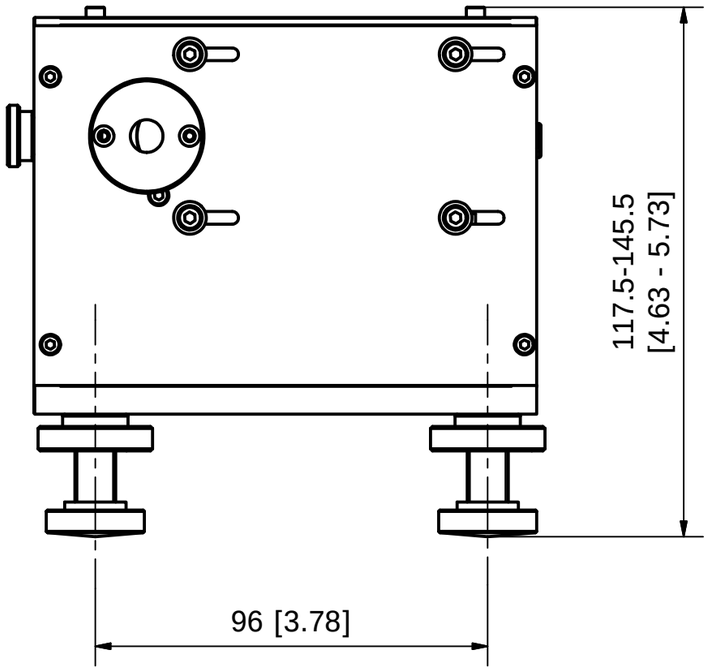

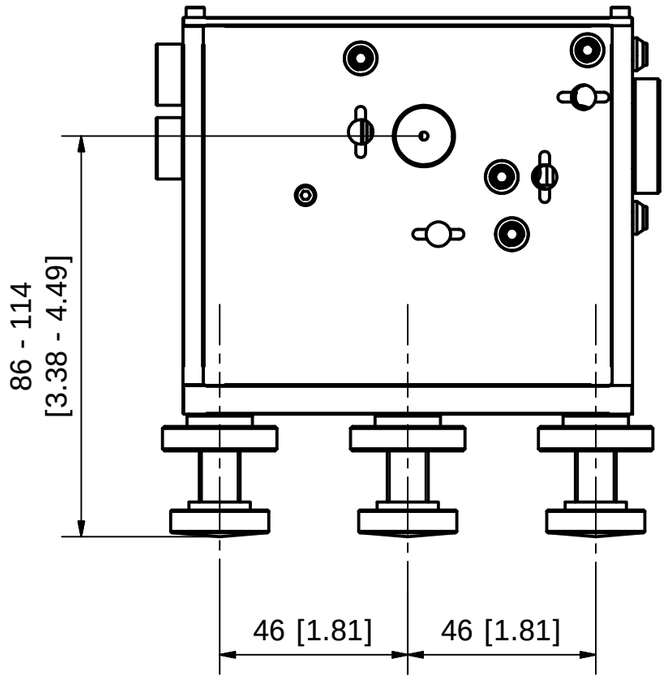

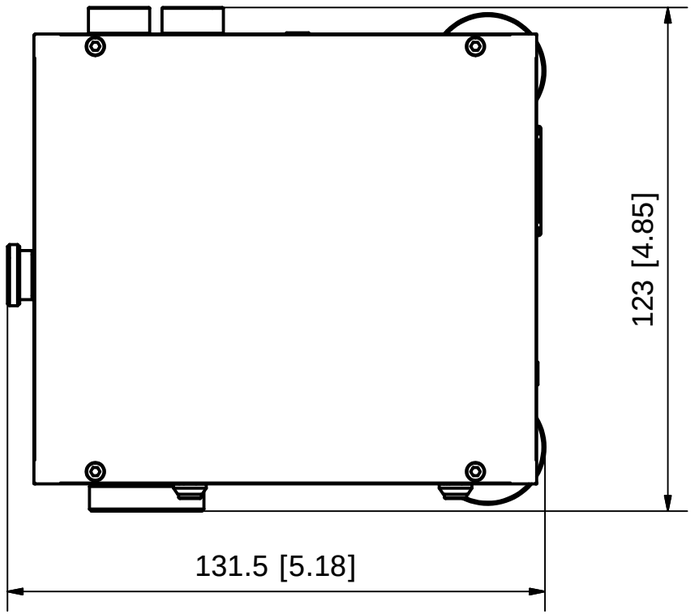

mm [inch]

INFORMATION ONLY, NOT FOR MANUFACTURING

Designed by	Checked by	Approved by	Date		Date	
Avesta Project Ltd.					20.01.2009	

Avesta Project Ltd.	Scanning Autocorrelator AA - 10DD		
	AA - 10DD	Edition R1.5	Sheet 1 / 1